Ternopil Ivan Pul'uj National Technical University

UKRAINE

Design Methods of Switch Mode Power Supplies

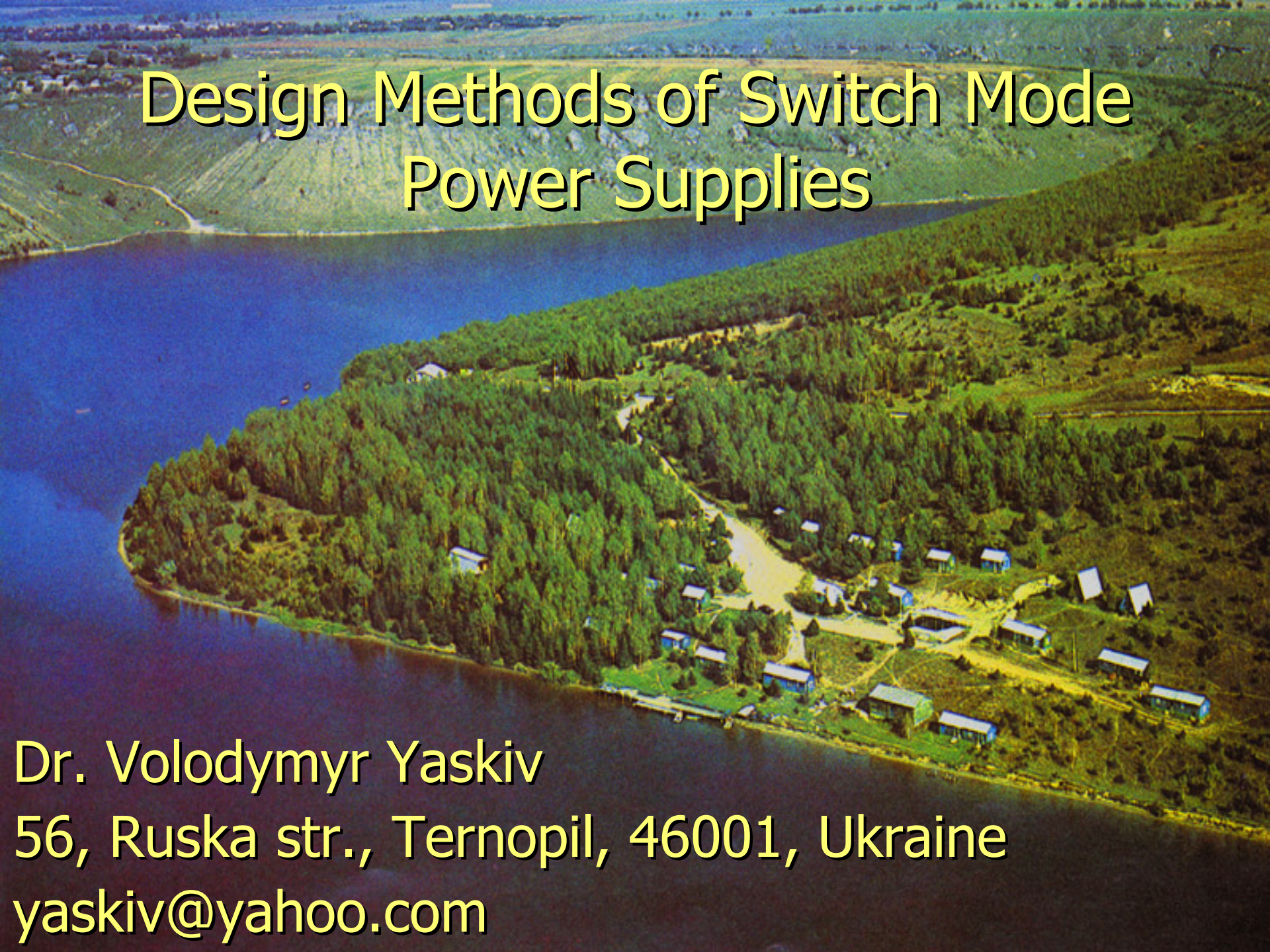

Dr. Volodymyr Yaskiv
56, Ruska str., Ternopil, 46001, Ukraine
yaskiv@yahoo.com

Criteria for designing of power supplies

- ensure of functional parameters at activity of the disturbing factor
- efficiency
- reliability
- mass and dimensions
- cost

Specific requirement are following:

- high dynamic characteristics at high quality of output voltages
- 100% change of a load current
- low level electromagnetic interference (EMI)
- other

Design of Switch Mode Power Supplies on base of High Frequency Magnetic Amplifier

- 25 years expirience
- SMPS designing for different assignments – space, radar, medicine, information technology, transport systems, lighting systems, welding, communication, nuclear power station, etc.

Comparative analysis of transistor and magnetic switches

The advantages of the magnetic switch in comparison with transistor switch are essential:

- is an AC voltage switch
- not critical to the form of input voltage
- gain on a current up to 1000
- simplicity of the control circuit (1-2 transistors in a linear mode)
- does not create electromagnetic interferences
- is by the filter of input interferences (both in non-saturated, and in a saturated condition)
- high efficiency (99 %), the losses do not depend on load current
- high level of radiation stability and mechanical stability
- does not require protection (itself serves a protection device of high-frequency transistor inverter)
- multifunctionality: the power amplifier, power switching device, pulse-width modulator, executes functions of the integrator, comparator, protection device

Comparative analysis of power supply on MS with transistor analogs

Advantages SMPS on magnetic switches in comparison with traditional transistor power supplies:

- capability of designing of multichannel SMPS with equivalent and independent output channels with 100 % range of change of the load current
- are suppose a broad range of change of input voltage
- high level of specific power
- high quality of output voltages (the high-frequency peaks and low-frequency component are absent)
- low level of EMI
- high level of dynamic parameters
- high efficiency
- in 2-3 times the cost price is lower
- high level of radiation stability and mechanical stability
- above reliability for the account as physical nature of МК, so and of essential simplification of circuitry
- high level of unification - possibility of using of one standard size of MS and same circuitry solutions for designing of SMPS in the broad range of output parameters

Main technical data of the multichannel switch mode power supplies:

Range of the input voltage change	to ± 30%
Efficiency	0.80 - 0.
Output voltage levels	5 - 200V
Pulse output voltage	10 - 50 r
(low-frequency reply and high voltage spike are absent)	
Common non-stability	to 1%
Current load levels	to 100A
Range of the load current change	100%
Possibility of the current stabilization	
Specific power on the home hardware	100 - 50
Output power multi-output SPS	50 – 50(
Number of output regulated channels	1-10 or r
Output power of the channel	25 – 50(
Frequency	50 – 10(
Temperature range	-60 -+80
Electro-magnetic compatibility and electro-safety in accordance with base requirement international standards of the computer and medical equipment	

Structure of the switch mode power supply on magnetic switces with of the high level load current (5 V, 200 A)

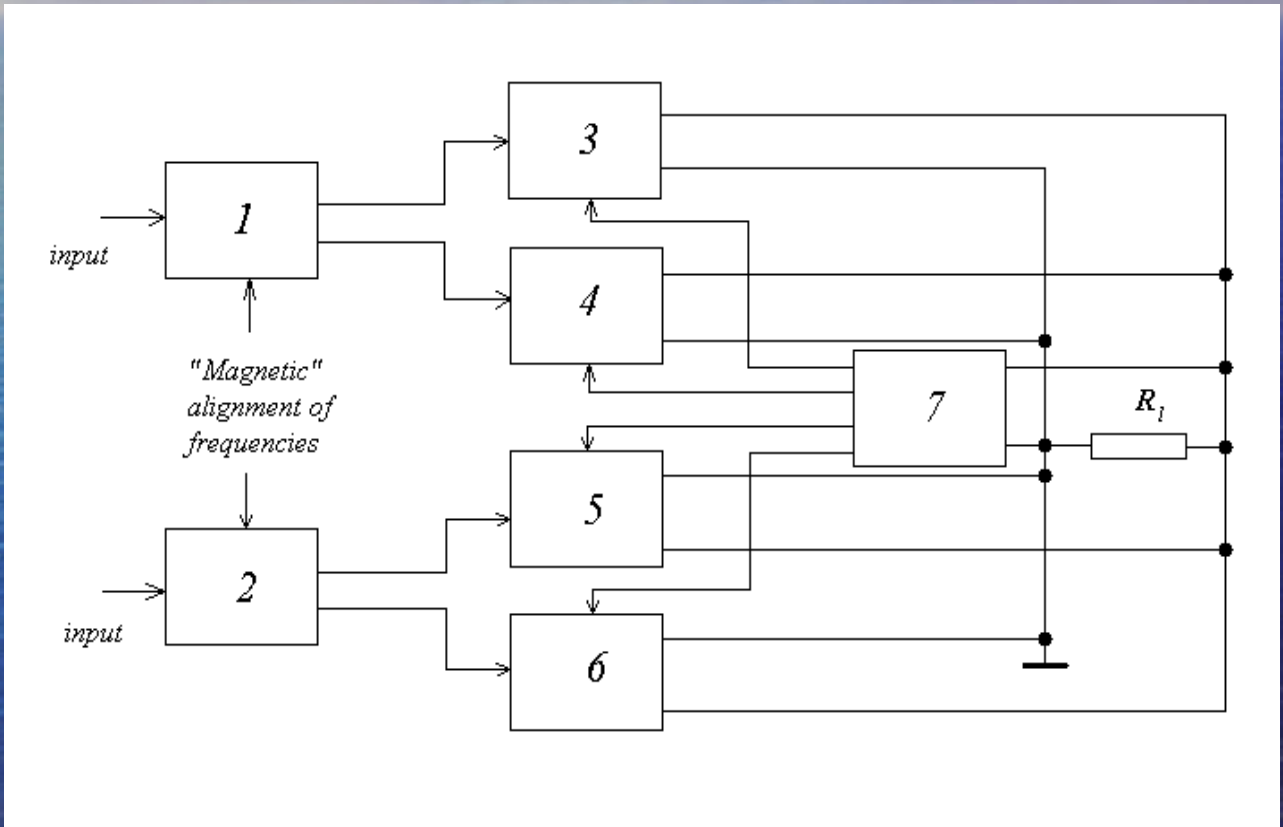

Bl
oc
k-
sc

Multiway Switch Mode Power Supply for Radio Devices

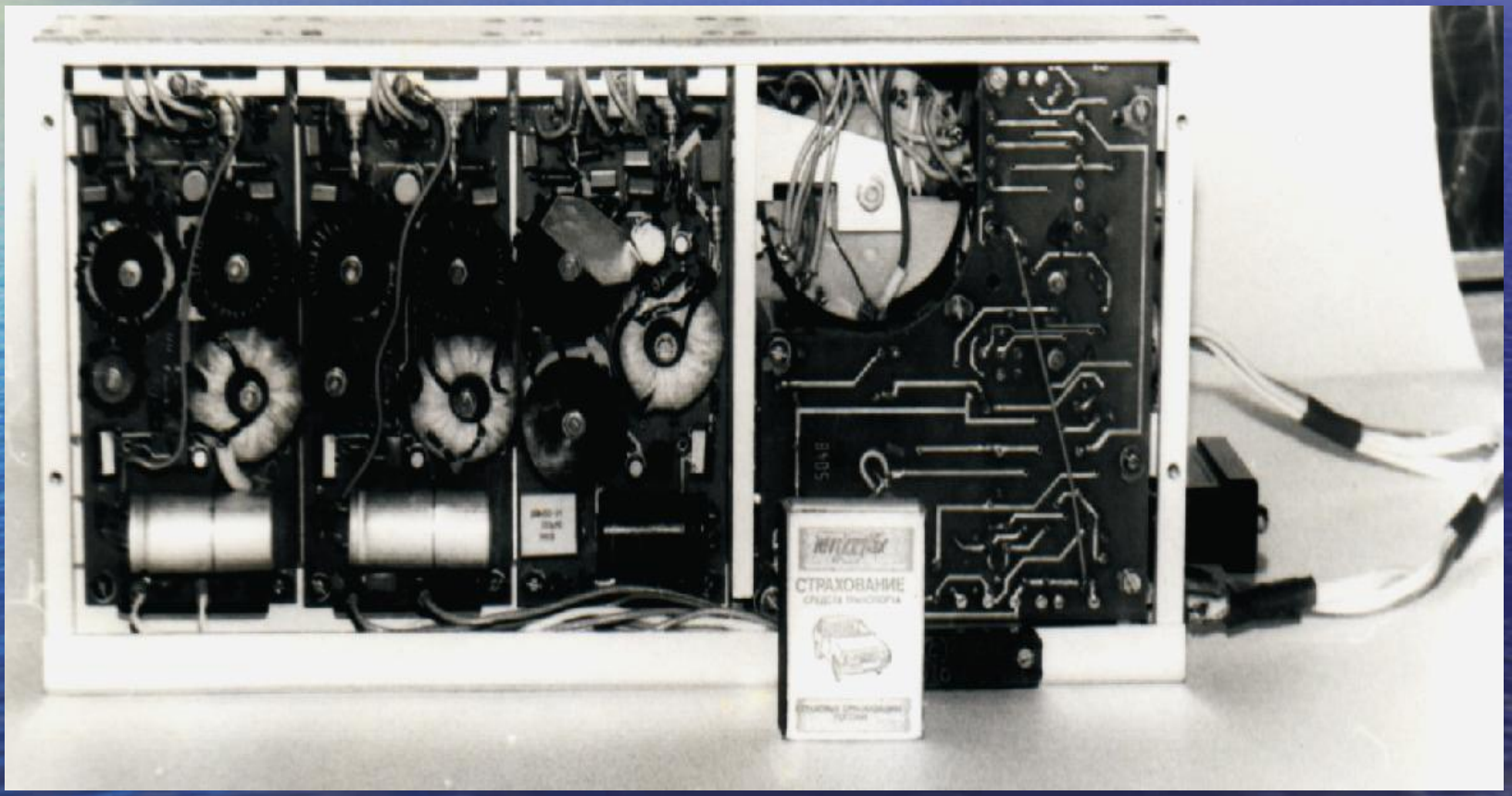

- input voltage 220 ±
- output power
- number output channels
- common nonstability
- ripple of output voltages <
- 100

Power System and Control of Apparatus of "Artificial Kidney"

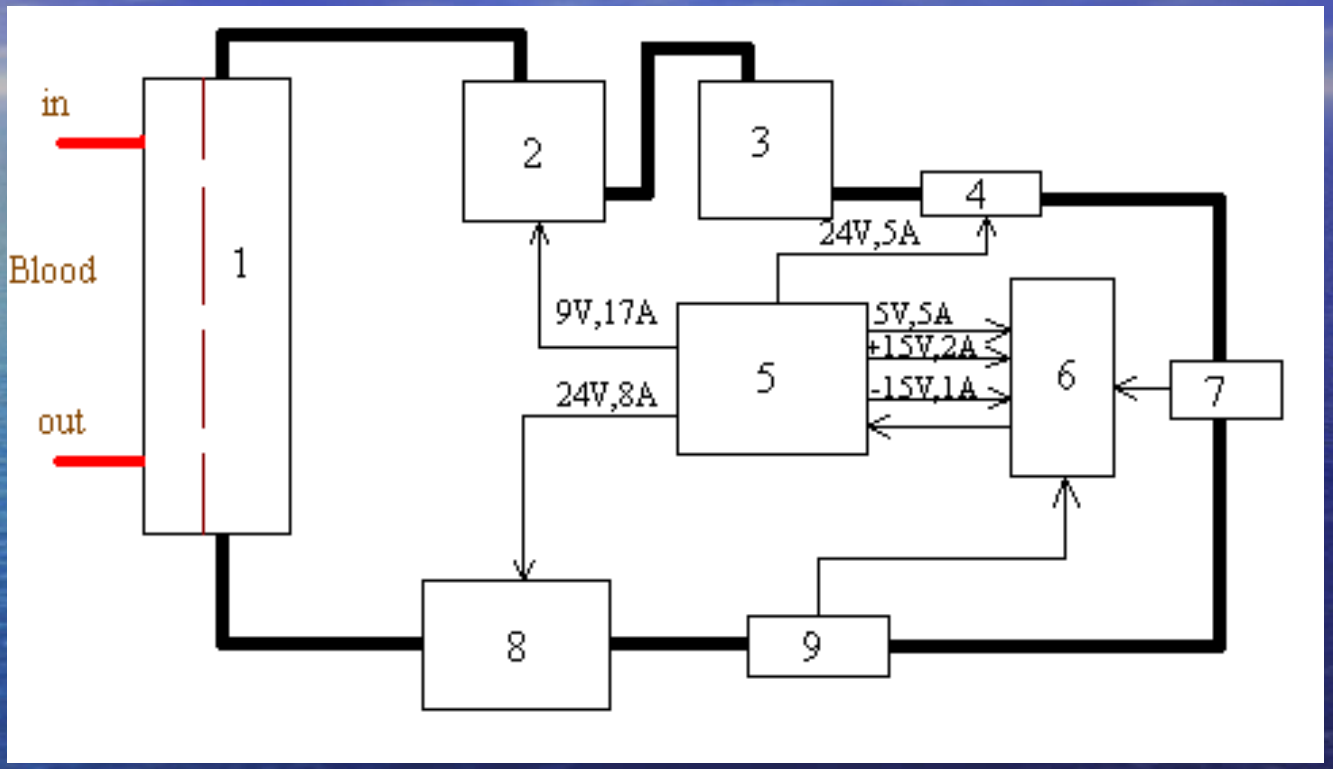

Block- scheme of the apparatus «the artificial kidney»
(1 – dialyser, 2 – electrochemical regenerator, 3 - block of padding clearing, 4 – pump, 5 – power suply, 6 – control system, 7 - sensor unit of concentration, 8 - heat exchanger, 9 - sensor unit of temperature)

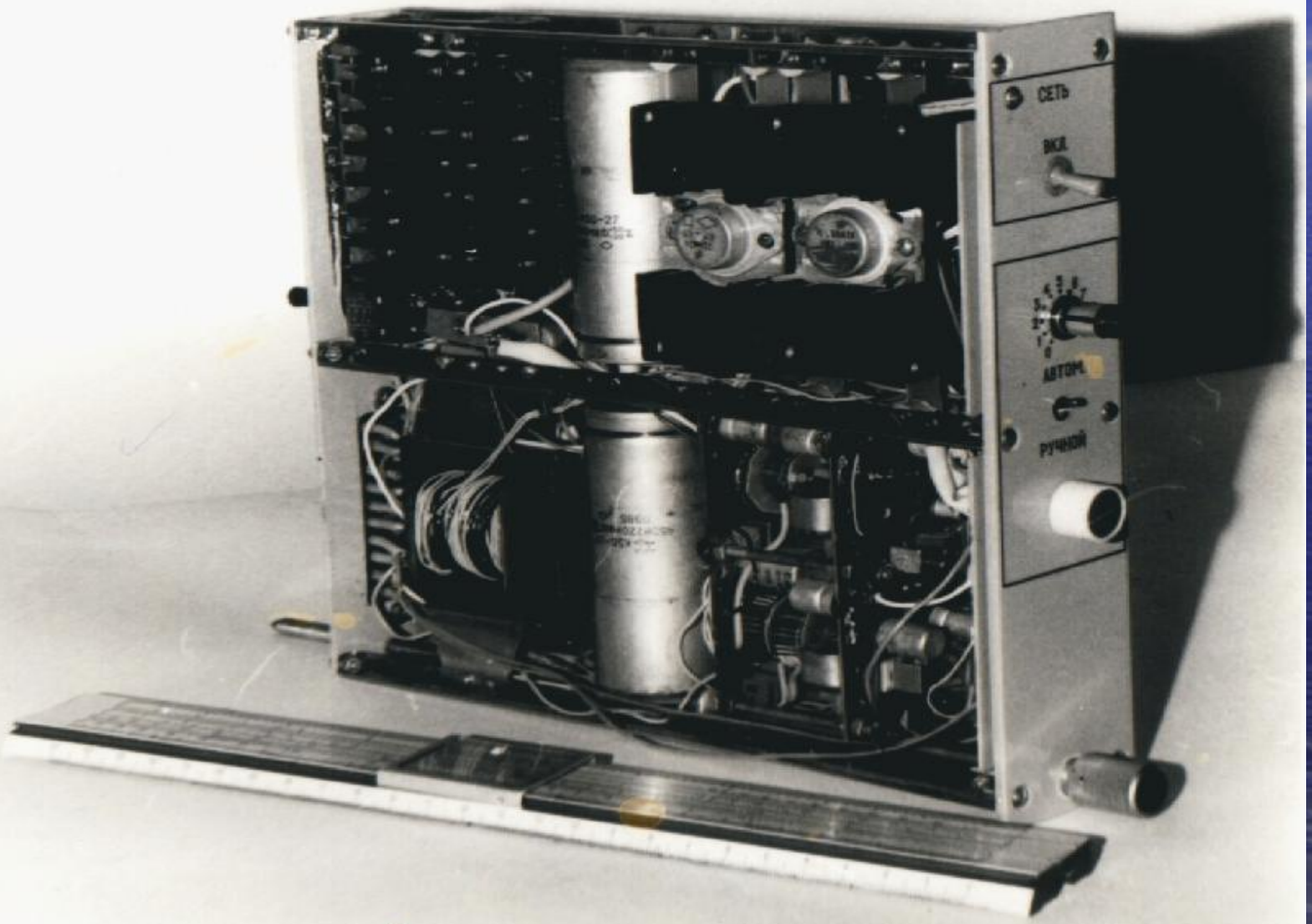
СЕТЬ
ВКЛ
АВТОМ
РУЧНОЙ

- input voltage 220
- output power
- number output channels
- input current of control ;
- common nonstability
- specific power 12


CeBIT
HANNOVER
18. – 24. 3. 2004


onal Technical University
of Ukraine
ev Polytechnical Institute"
Ternopol State Ivan Pul'uj
Technical University
INSTITUTE
OF APPLIED
SYSTEM
ANALYSIS

Examples of SMPS designing with using MS for different assignment

Multioutput Switch Mode Power Supply for Transmitting Devices of Remote Automated Control System by Electric Power Systems

- input AC voltage	220 V
- input voltage range	150.
- output channels	12
	5
	1
- range of the load current change	
- efficiency	
- ripple of output voltages	
- common nonstability	
- working frequency	
- temperature range	-40...
- size	195x175

Switch Mode Power Supply for Radiostations of the Railway Transport

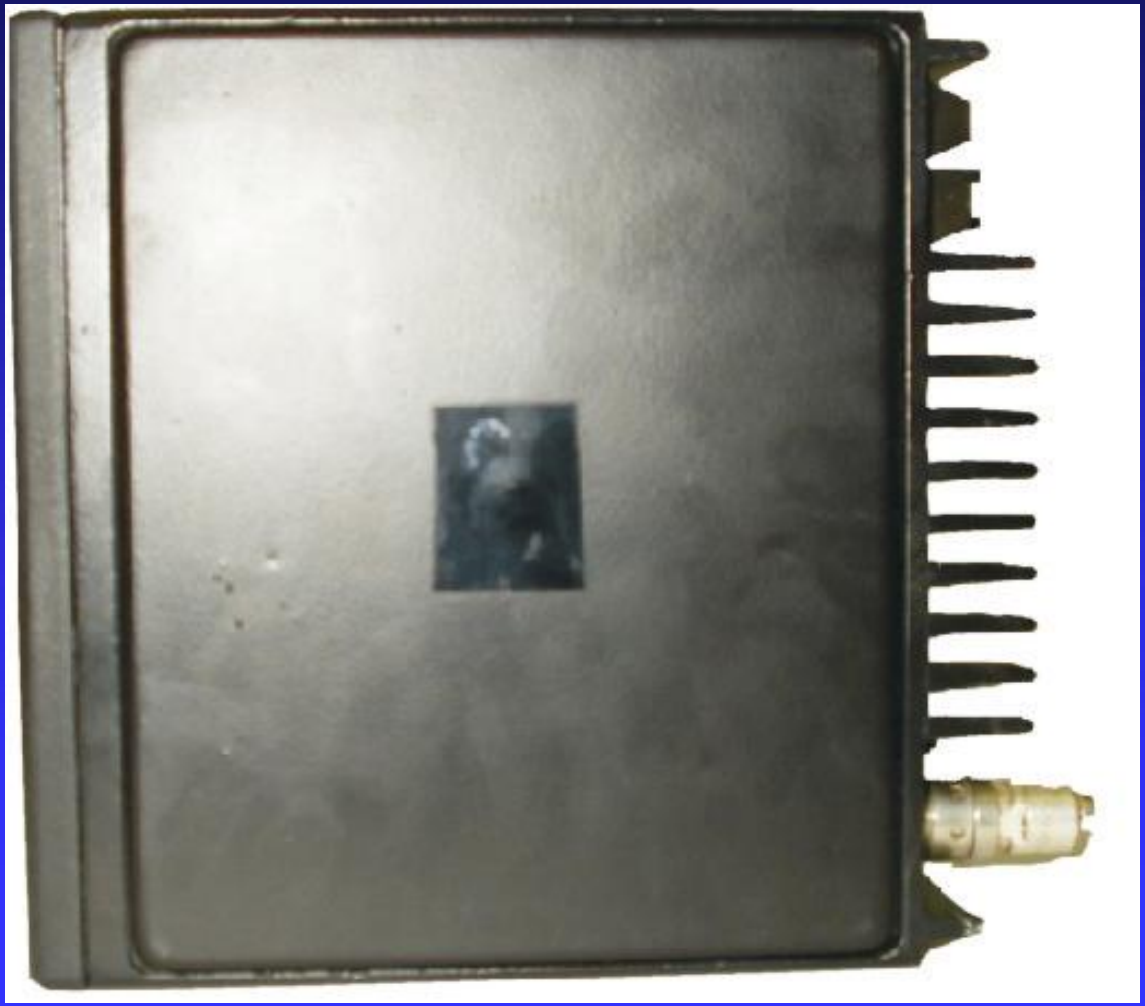

- output power
- output voltage
- load current
- input voltage
- load current range
- efficiency
- working frequency
- output voltage ripple
- common nonstability

155…265V AC, 1

Power Supply of Brake Devices of the Electric Drive of Antenna

- input voltage 220 :
- output power
- max output power
- number output channels
- output voltage
- load current
- common nonstability
- ripple of output voltages >10(
- specific power

Power supply for car radio scaner

- input voltage	12V ± 20%
- output power	100 W
- output voltage	24 V
- load current	0…4 A
- efficiency	75 %
- working frequency	50 кHz


国家软件
产业基地
05.13.2005 08:21

Power supply for IT

- input voltage	220V ±20%, 50 Hz
- output power	240 W
- output voltage	24 V
- load current	0…10 A
- efficiency	88-92 %
- working frequency	50 кHz
- temperature range	– 10… +50 °C
- dimension	120x200x50 мм

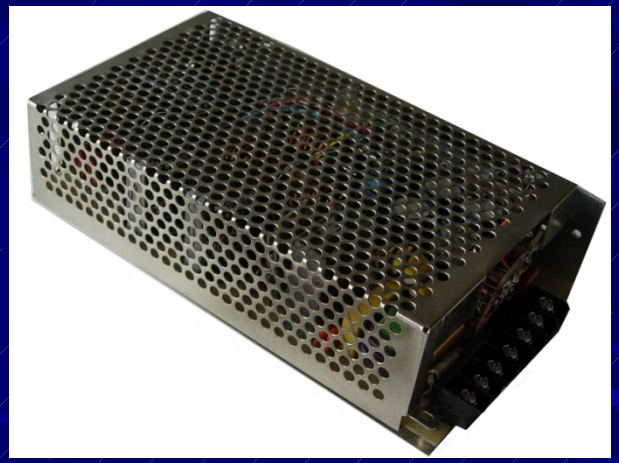

Power supply with high level load current

- input voltage	135...270В, 50 Гц.
- output power	250 Вт
- output voltage	5 В
- load current	0…50 А
- efficiency	82 %
- working frequency	50 кГц
- температурний діапазон	– 40… +50 °С
- габарити	100x220x60 мм

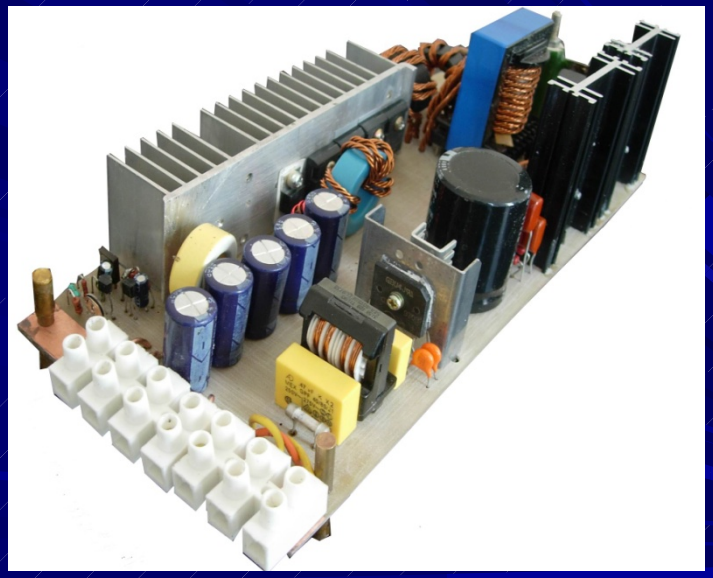


05.01.2008 23:55


University of California, Irvine
05.03.2008 22:49


05.02.2008 21:01

Power supply 24V, 10A

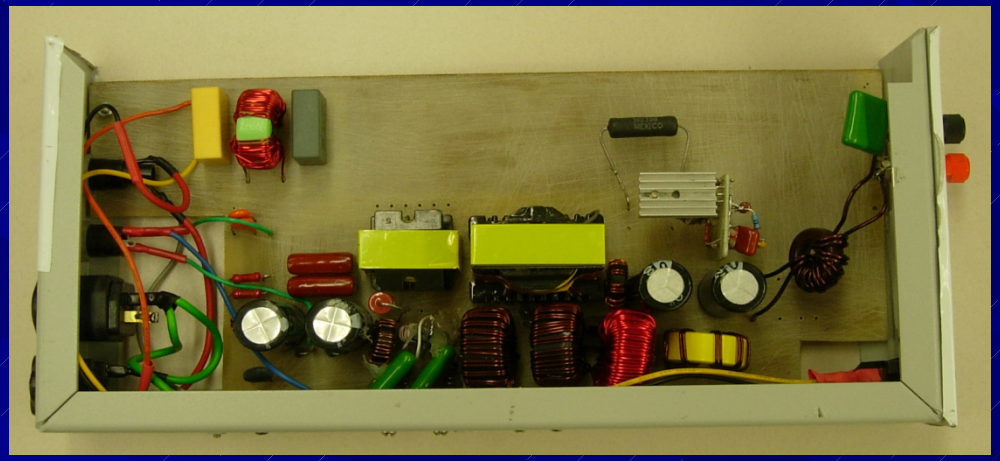

The load characteristics of the experimental MS power supply

Load current, A	0		3		4,8		8		Input AC voltage, V
	*	**	*	**	*	**	*	**	
Output DC voltage, V	24,10		24,07	24,03	24,08	24,03	24,09	24,01	100
	24,09		24,07	24,03	24,08	24,03	24,09	24,01	110
	24,09		24,07	24,03	24,08	24,02	24,09	24,01	120

Electromagnetic interferences for different power supplies (output power 240W) (analog PS – left, our PS design on magnetic switches – right)

RADIATED EMISSIONS - EVALUATION ONLY

EUT:	DC/DC Converter	Work Order:	
Serial Number:	Prototype	Date:	05/14/08
Customer:		Temperature:	24.4
Attendees:	none	Humidity:	41%
Project:	None	Barometric Pres.:	1016
Tested by:	Power: 120VAC/60Hz	Job Site:	

TEST SPECIFICATIONS	Test Method
FCC 15.109(g) (CISPR 22:1997) Class A	ANSI C63.4

TEST PARAMETERS

Antenna Height(s) (m): 1.0, 1.5, 2.0, 2.5, 3.5 | Test Distance (m): 3

COMMENTS

Commercial 200W AC/DC

EUT OPERATING MODES

DEVIATIONS FROM TEST STANDARD

No deviations.

Run #	2
Configuration #	1
Results	Evaluation

Signature

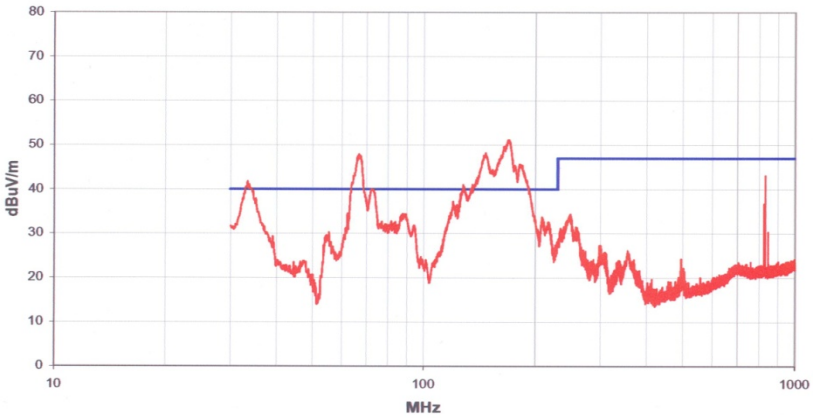

Freq (MHz)	Amplitude (dBuV)	Preamp (dB)	Antenna Height (m)	Transducer (dB)	Cable (dB)	External Attenuation (dB)	Polarity/ Transducer Type	Detector (blank equal peak; [PK] from scan)	Distance Adjustment (dB)	Adjusted dBuV/m	Spec. Limit dBuV/m	Compared to Spec. (dB)
169.740	67.0	21.6	1.5	15.5	0.7	0.0	H		-10.5	51.2	40.0	11.2
146.647	64.9	21.6	2.0	14.7	0.7	0.0	H		-10.5	48.3	40.0	8.3
66.711	66.4	21.4	1.0	13.1	0.3	0.0	V		-10.5	48.0	40.0	8.0
181.464	60.9	21.5	1.5	15.9	0.9	0.0	H		-10.5	45.7	40.0	5.7
168.319	61.3	21.6	1.5	15.5	0.7	0.0	V		-10.5	45.5	40.0	5.5
66.356	63.9	21.4	3.5	13.1	0.3	0.0	H		-10.5	45.5	40.0	5.5
33.316	50.6	21.5	1.0	23.1	0.1	0.0	V		-10.5	41.8	40.0	1.8
147.121	58.4	21.6	1.0	14.7	0.7	0.0	V		-10.5	41.8	40.0	1.8
127.581	58.8	21.6	2.5	13.7	0.6	0.0	H		-10.5	41.0	40.0	1.0
175.069	55.7	21.5	2.5	15.7	0.8	0.0	V		-10.5	40.2	40.0	0.2
72.396	58.5	21.5	1.0	13.2	0.4	0.0	V		-10.5	40.1	40.0	0.1
180.398	53.6	21.5	2.0	15.9	0.9	0.0	V		-10.5	38.4	40.0	-1.6
119.883	54.9	21.7	2.5	13.9	0.6	0.0	H		-10.5	37.3	40.0	-2.7
122.844	54.2	21.7	1.5	13.8	0.6	0.0	H		-10.5	36.5	40.0	-3.5
122.015	53.9	21.7	2.5	13.9	0.6	0.0	H		-10.5	36.2	40.0	-3.8
832.008	43.8	21.4	2.0	28.3	2.8	0.0	H		-10.5	43.1	47.0	-3.9
62.211	52.8	21.4	3.5	13.3	0.3	0.0	H		-10.5	34.5	40.0	-5.5
87.672	51.6	21.6	1.0	14.5	0.4	0.0	V		-10.5	34.5	40.0	-5.5
208.346	48.0	21.5	1.0	16.6	1.0	0.0	H		-10.5	33.7	40.0	-6.3

RADIATED EMISSIONS - EVALUATION ONLY

EUT:	AC/DC Converter	Work Order:	
Serial Number:	Prototype	Date:	05/14/08
Customer:		Temperature:	24.4
Attendees:	none	Humidity:	41%
Project:	None	Barometric Pres.:	1016
Tested by:	Power: 120VAC/60Hz	Job Site:	

TEST SPECIFICATIONS	Test Method
FCC 15.109(g) (CISPR 22:1997) Class A	ANSI C63.4

TEST PARAMETERS

Antenna Height(s) (m): 1.0, 1.5, 2.0, 2.5, 3.5 | Test Distance (m): 3

COMMENTS

magnetic amp AC/DC Converter 200/1

EUT OPERATING MODES

DEVIATIONS FROM TEST STANDARD

No deviations.

Run #	1
Configuration #	1
Results	Evaluation

Signature

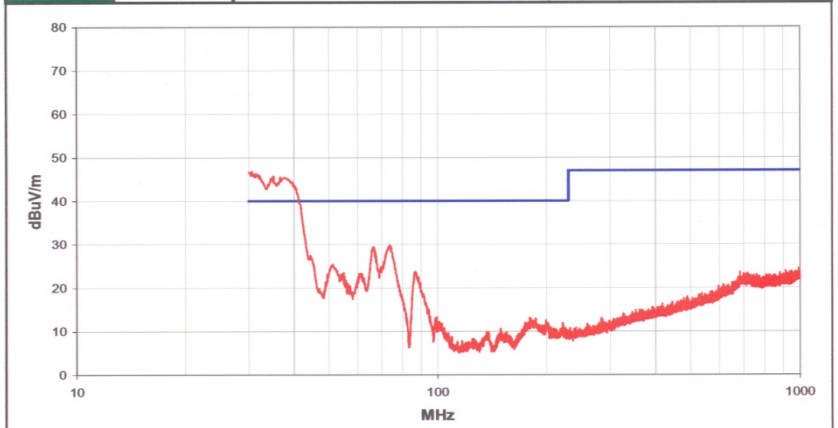

Freq (MHz)	Amplitude (dBuV)	Preamp (dB)	Antenna Height (m)	Transducer (dB)	Cable (dB)	External Attenuation (dB)	Polarity/ Transducer Type	Detector (blank equal peak; [PK] from scan)	Distance Adjustment (dB)	Adjusted dBuV/m	Spec. Limit dBuV/m	Compared to Spec. (dB)
30.592	54.0	21.5	1.0	24.7	0.1	0.0	V		-10.5	46.8	40.0	6.8
35.092	55.6	21.5	1.0	22.0	0.2	0.0	V		-10.5	45.8	40.0	5.8
36.632	56.2	21.5	1.0	21.1	0.2	0.0	V		-10.5	45.5	40.0	5.5
37.342	42.8	21.5	3.5	20.6	0.2	0.0	H		-10.5	31.7	40.0	-8.3
32.132	37.9	21.5	3.5	23.8	0.1	0.0	H		-10.5	29.8	40.0	-10.2
73.580	48.1	21.5	1.0	13.3	0.4	0.0	V		-10.5	29.8	40.0	-10.2
66.356	47.9	21.4	1.0	13.1	0.3	0.0	V		-10.5	29.5	40.0	-10.5
51.198	42.1	21.3	1.0	14.8	0.3	0.0	V		-10.5	25.4	40.0	-14.6
66.474	42.8	21.4	3.5	13.1	0.3	0.0	H		-10.5	24.4	40.0	-15.6
86.606	41.0	21.6	1.0	14.4	0.4	0.0	V		-10.5	23.8	40.0	-16.2
54.869	40.8	21.3	1.0	14.2	0.3	0.0	V		-10.5	23.5	40.0	-16.5
60.672	41.6	21.4	1.0	13.4	0.2	0.0	V		-10.5	23.4	40.0	-16.6
56.172	38.6	21.3	1.0	14.0	0.2	0.0	V		-10.5	21.0	40.0	-19.0
44.448	33.5	21.4	2.5	17.2	0.2	0.0	H		-10.5	19.1	40.0	-20.9
991.859	23.4	21.4	2.5	29.9	3.0	0.0	V		-10.5	24.4	47.0	-22.6
911.933	23.8	21.5	2.0	29.2	2.8	0.0	V		-10.5	23.9	47.0	-23.1
995.174	22.7	21.4	1.0	29.9	3.0	0.0	V		-10.5	23.8	47.0	-23.2
948.166	23.6	21.5	2.5	29.2	2.9	0.0	V		-10.5	23.8	47.0	-23.2
993.043	22.7	21.4	2.0	29.9	3.0	0.0	H		-10.5	23.7	47.0	-23.3

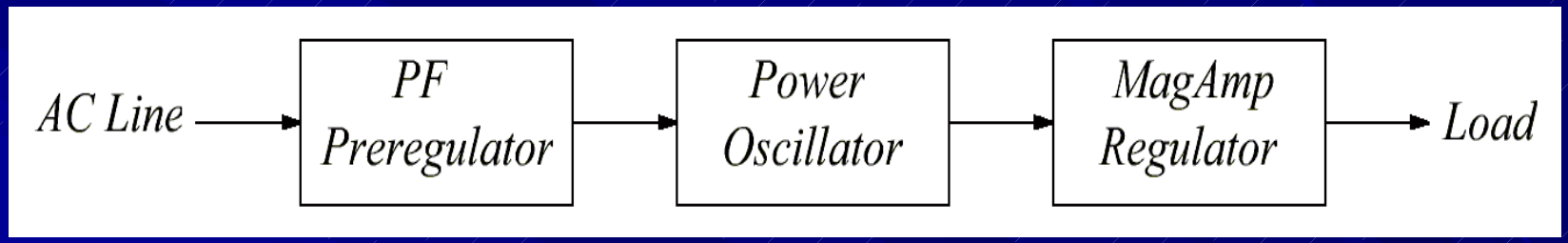

Block Diagram of the proposed ac-dc converter

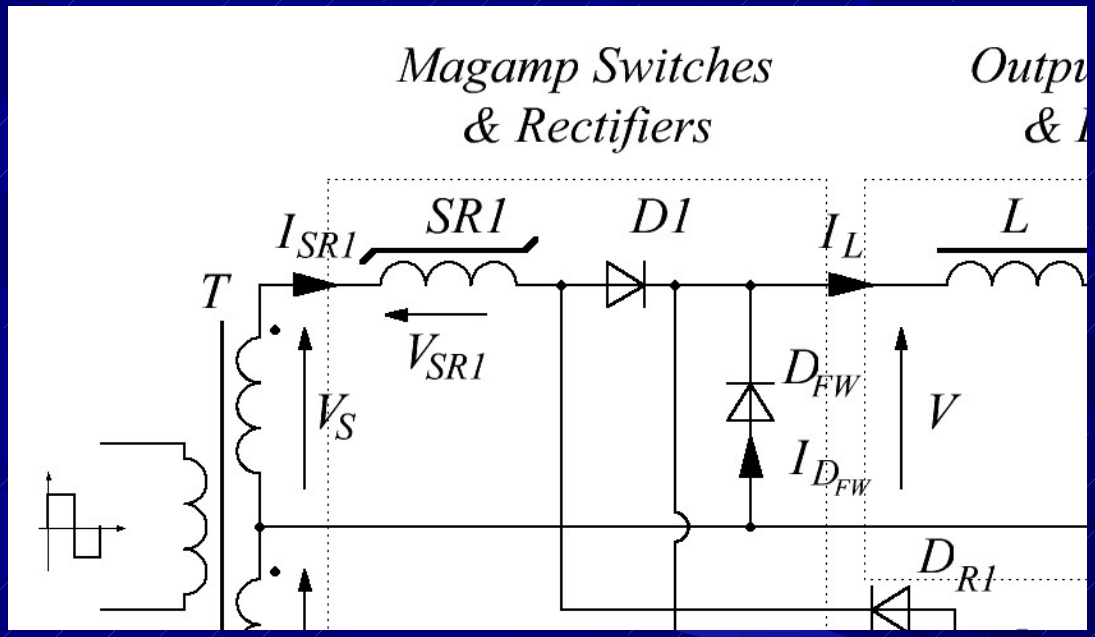

A basic push-pull MagAmp regulator circuit

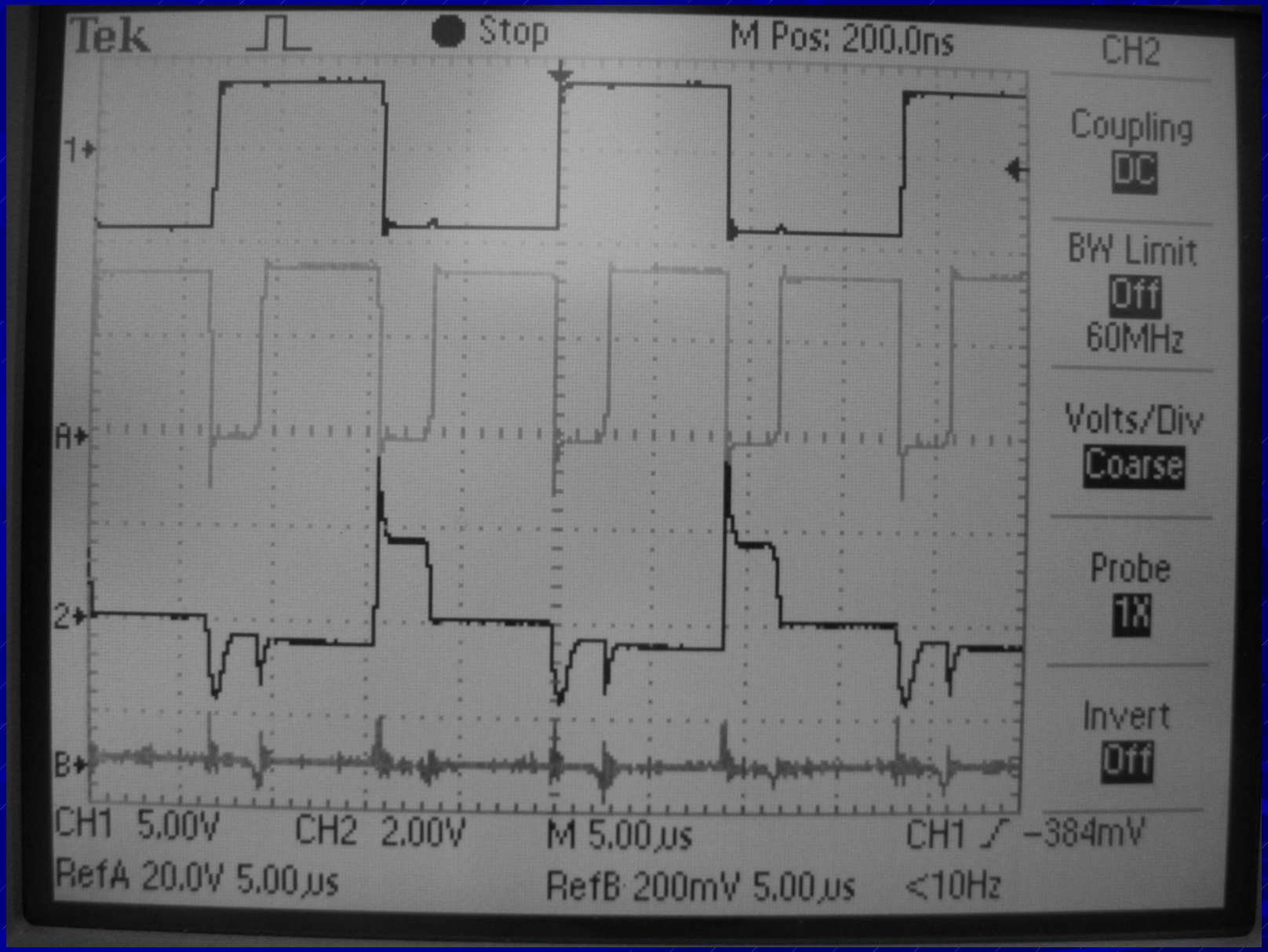
Tek
Stop
M Pos: 200.0ns
CH2
Coupling
DC
BW Limit
Off
60MHz
Volts/Div
Coarse
Probe
1X
Invert
Off
1
A
2
B
CH1 5.00V
CH2 2.00V
M 5.00µs
CH1 ∕ −384mV
RefA 20.0V 5.00µs
RefB 200mV 5.00µs
<10Hz

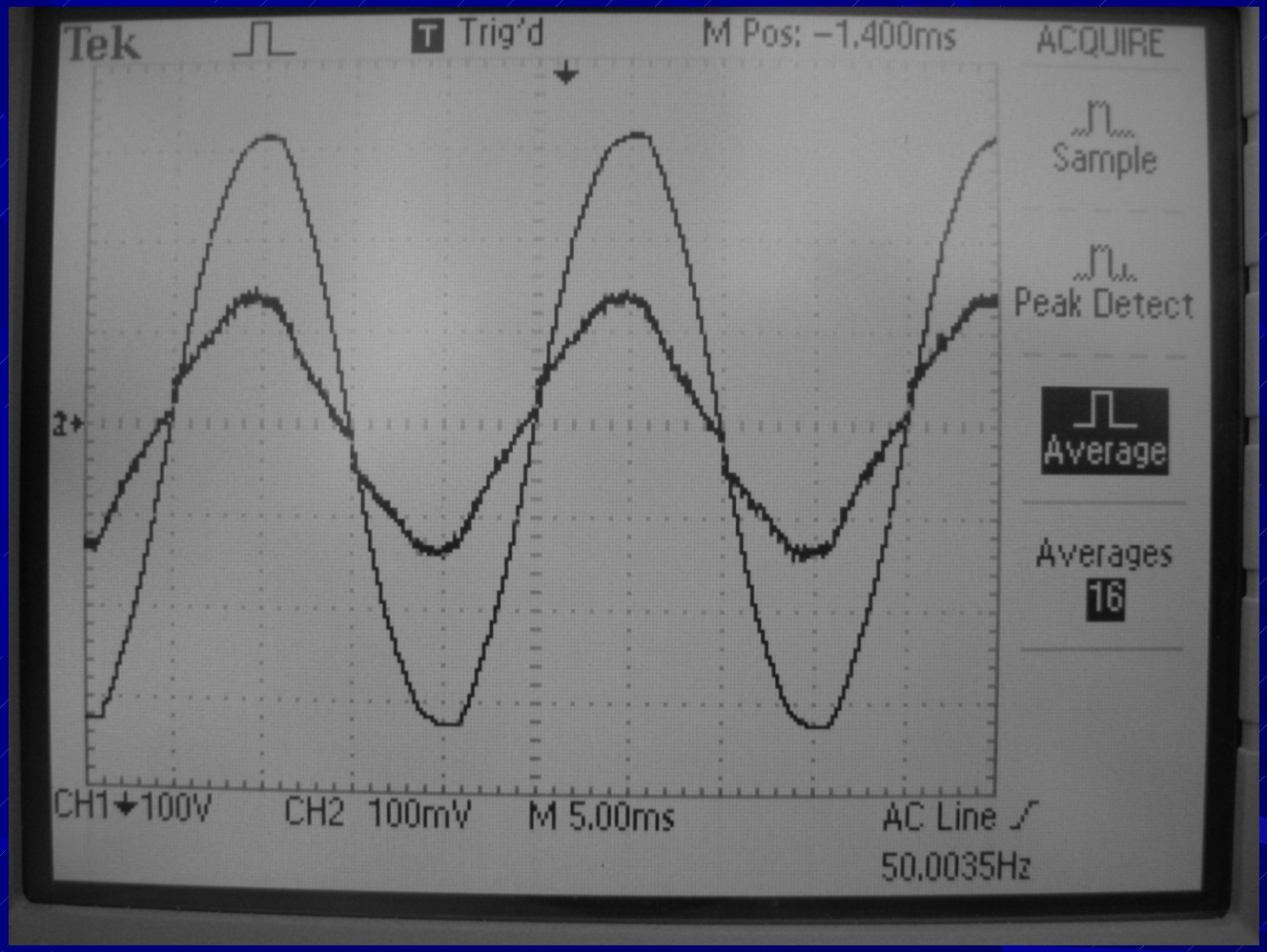
Tek
Trig'd
M Pos: -1.400ms
ACQUIRE
Sample
Peak Detect
Average
Averages
16
CH1 100V
CH2 100mV
M 5.00ms
AC Line
50.0035Hz

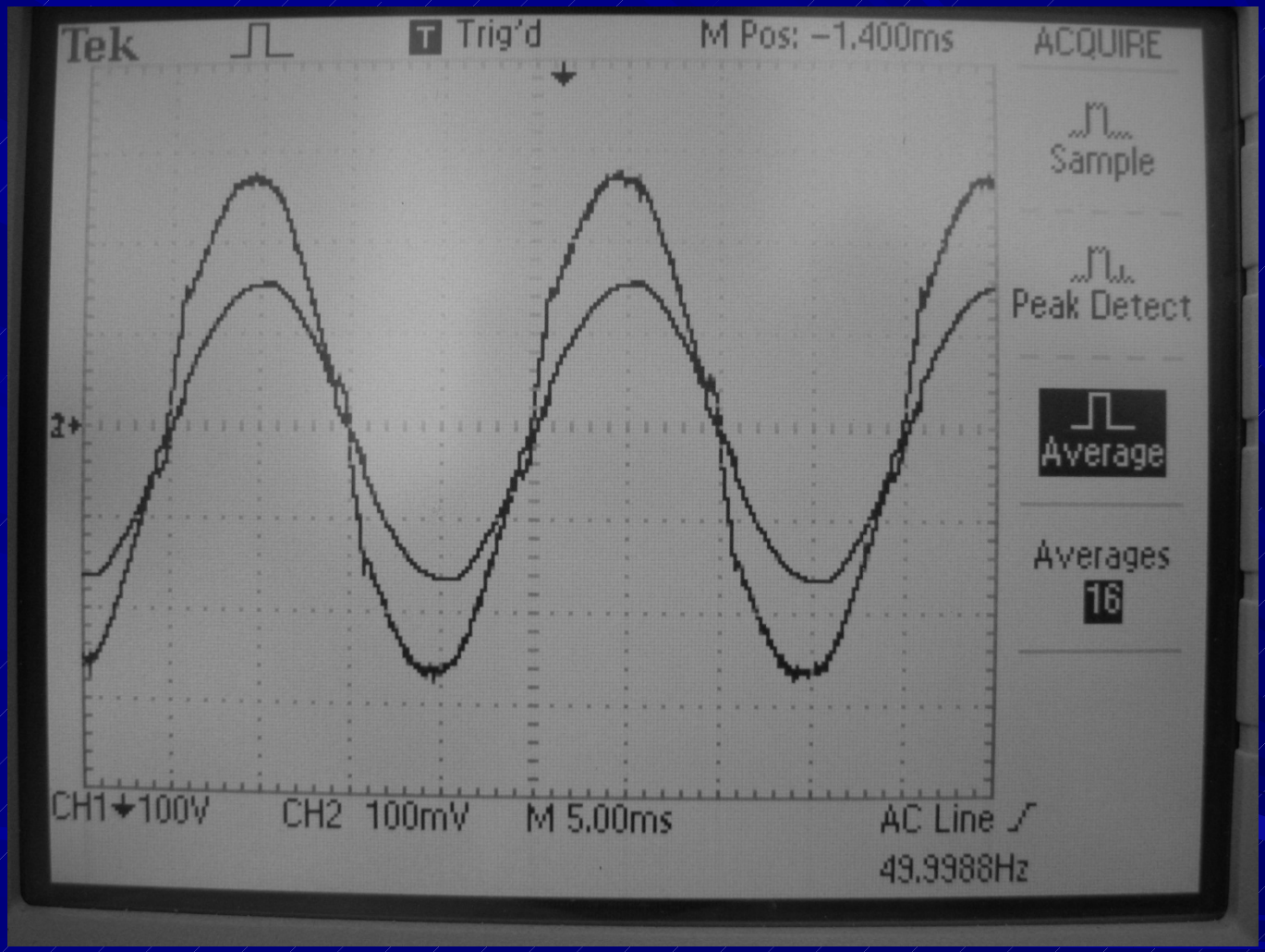
Tek
Trig'd
M Pos: -1.400ms
ACQUIRE
Sample
Peak Detect
Average
Averages
16
CH1 100V
CH2 100mV
M 5.00ms
AC Line
49.9988Hz

Experimental waveforms of line voltage and current under full load (Pout=240W) as measured for:
230VAC, (b) 115VAC, (c) 90VAC line voltages. Ch1: Line voltage (100V/Div);
Ch2: Line current (1.33Amp/Div); Horizontal scale 5mSec.

Power Factor as measured at 230VAC, 115VAC, 90VAC line voltages.

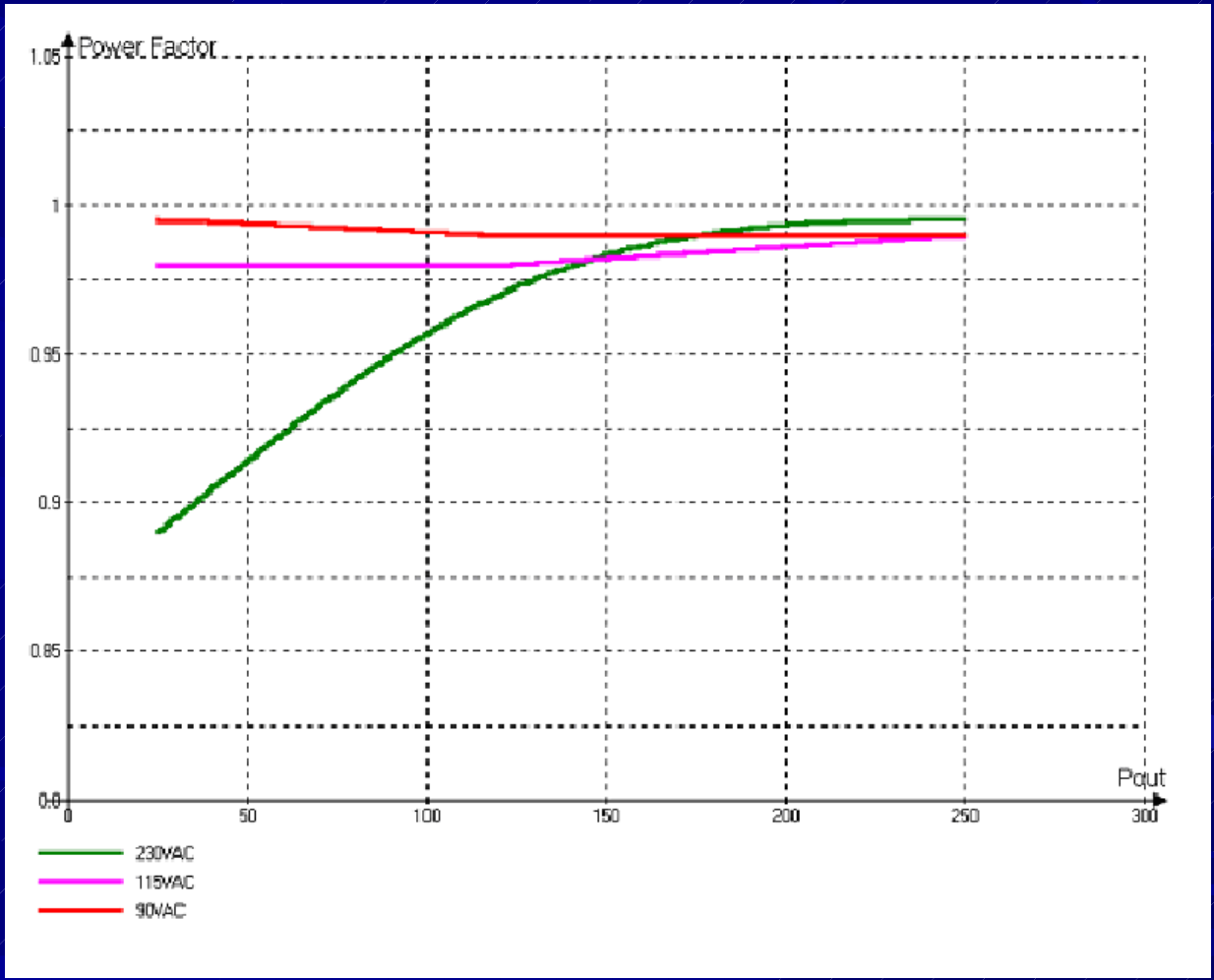

Converter's efficiency as measured for 230VAC, 115VAC, 90VAC line voltages.

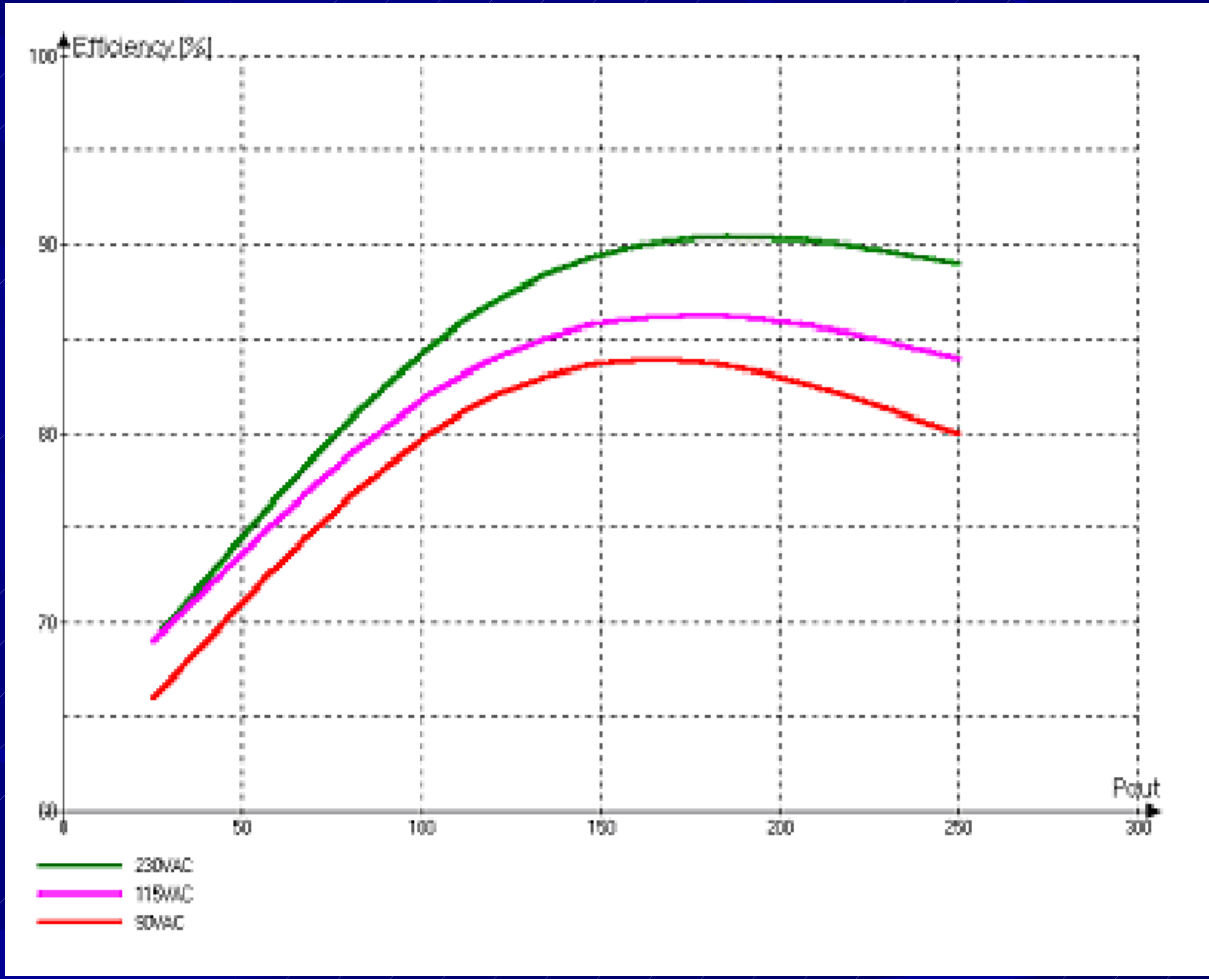


THANKS